EE741

Modular, compact, inline flow meter for compressed air and gases

The EE741 inline flow meter is dedicated for accurate metering and monitoring of compressed air and technical gases in DN15 to DN50 pipes.

The thermal measuring principle and the well-proven E+E hot film sensor element lead to best long-term stability and fast response time.

Outstanding measuring accuracy, even in the lower measuring range is achieved by an application-specific multi-point factory adjustment performed at 7 bar (102 psi). This allows reliable leak detection and corresponding energy savings.
The construction of the EE741 is optimized for easy installation and maintenance.

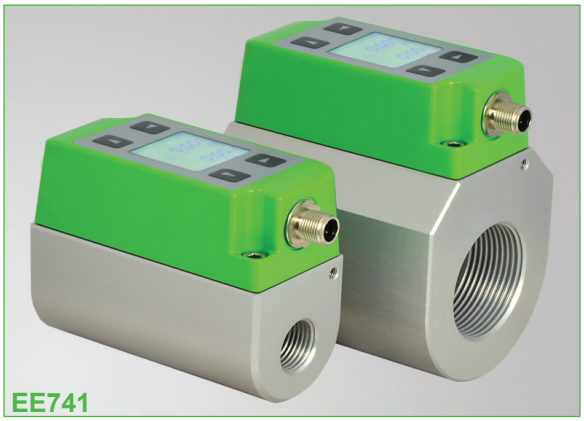

The EE741 is user configurable and can be easily adapted to any measuring task. The setup can be set using either display and push buttons or the free product configuration software EE-PCS.

Typical applications

- Compressed air consumption measurement
- Monitoring of technical gases O_2, N_2, Ar, CO_2 and other
- Nitrogen generators
- Leak detection

Features

Transmitter

» For each three pipe diameters
» Installation and removal without dis-assembling the pipework facilitates-regular calibration
» Application-specific adjustment under pressure for best accuracy

Display

» Shows instantaneous values and overall consumption
» Intuitive device setup with push-buttons
» Can be rotated in 90° increments

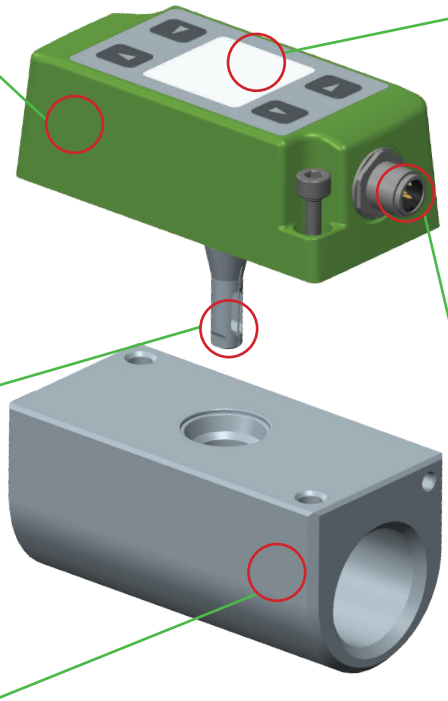

Sensor head and thermal flow sensor

» Robust design in stainless steel
» Very short response time
» Wide measuring range
» Long-term stable and accurate
» Negligible pressure drop
» Highly insensitive to contamination
» No additional pressure and temperature compensation required

Output

» User configurable via display or PC
» 0-20 / 4-20 mA output
» Two switch outputs
» Pulse output
» Modbus RTU
» M-Bus

Measurands

» Standard volume flow
» Mass flow
» Standard flow
» Temperature
» Integrated consumption meter (totalisator) for cost-effective consumption analysis without additional datalogger

Gauge mounting block

» Precise and reproducible positioning of the transmitter for best accuracy
» Aluminum or stainless steel
» Can be operated with sealing plug also without transmitter

Modular design

One and the same transmitter can be used for each of three pipe diameters:

EE741: DN15 (1/2“) / DN20 (3/4“) / DN25 (1“)
EE741-N50: DN32 (1-1/4“) / DN40 (1-1/2“) / DN50 (2“)

The pipe diameter is easily changed via the display menu or the Configurator software.

Once the gauge mounting block is built into the pipeline, the transmitter can be installed and removed without disassembling the pipework. As a result, the EE741 is also ideal for temporary measurement at serveral mounting blocks. The sealing plug included in the scope of supply enable the normal operation of the compressed air system when the transmitter is removed.

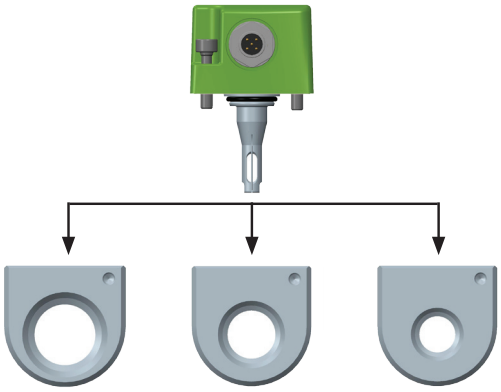

Display (optional)

The state-of-the-art LCD shows the current measured values and the overall consumption. The user specific device setup can be easily performed with the push buttons and intuitive menu guidance.

The display can be rotated in 90° increments with a push button for convenient orientation in any mounting position of the flow meter.

The EE741 without display can be configured by the user via USB interface with the free EE-PCS product configuration software.

Connection diagram

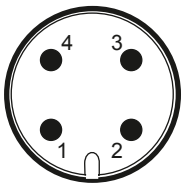

M12 plug on device

Analogue/switch/ pulse output	Modbus RTU	M-Bus / Meter-bus
1...V+	1...V+	1...V+
2...Output 1	2...RS485 A (=D+)	2...M-Bus
3...GND	3...GND	3...GND
4...Output 2	4...RS485 B (=D-)	4...M-Bus

Output 1: Analogue [mA] or switch
Output 2: Pulse or switch
The output signal is freely selectable and configurable.

Technical data

Measured values

Flow

Measurands	m^3/h, m^3/min, l/min, l/s, kg/h, kg/min, m/s, SCFM, ft/min, °C, °F
Standard conditions (factory setting)	1013.25 mbar (14.7 psi), 0 °C (32 °F) (configurable)
Measuring range in air [1]	DN15 (1/2"): 0.2...76.3 Nm^3/h (0.12...44.88 SCFM) DN20 (3/4"): 0.4...135.7 Nm^3/h (0.24...79.77 SCFM) DN25 (1"): 0.6...212 Nm^3/h (0.36...124.71 SCFM) DN32 (1-1/4"): 0.9...347.4 Nm^3/h (0.52...202.06 SCFM) DN40 (1-1/2"): 1.4...542.8 Nm^3/h (0.81...315.71 SCFM) DN50 (2"): 2.2...848.2 Nm^3/h (1.22...493.35 SCFM)
Accuracy[2] in air at 7 bar (102 psi) (abs) and 23 °C (73 °F)	± (3 % of measured value + 0.3 % of full scale)
Temperature coefficient	± 0.25 % of the measured value / °C deviating from 23 °C (73 °F)
Pressure coefficient[3]	+ 0.5 % of the measured value / bar deviating from 7 bar (102 psi)
Response time t_{90}	< 2 sec.
Measuring rate	0.1 sec.

Temperature

Measuring range	-20...60 °C (-4...140 °F)
Accuracy at 20 °C (68 °F) and flow >0.5 Nm/s	± 0.7 °C (1.26 °F)

Outputs

Analogue output (scalable)	0 - 20 mA / 4 - 20 mA R_L<500 Ohm
Switch output	DC PNP, max. 100 mA, V_{drop} <2.5 V, 10 kOhm Pull-down Configurable: N/C or N/O, hysteresis, window
Pulse output	Consumption meter, pulse length 0.02...2 sec.
Bus-interface	Modbus RTU (max. 32 units in one bus) or M-BUS (Meter-Bus)
Configuration interface	USB

General

Supply voltage	18 - 30 V DC
Current consumption (max.)	
with display	I_{max} ≤120 mA (P_{max} ≤2,5 W)
without display	I_{max} ≤60 mA (P_{max} ≤1,6 W)
Operating pressure (max.)	16 bar (232 psi)/ PN16
Ambient temperature	
with display	0...50 °C (32...122 °F)
without display	-20...60 °C (-4...140 °F)
Medium and storage temperature	-20...60 °C (-4...140 °F)
Humidity	0…100 % RH, non-condensing
Medium	Compressed air or none corrosive gases
Electrical connection	M12x1 4 pol. plug
Electromagnetic compatibility	EN61326-1 EN61326-2-3 Industrial environment
Material	
Enclosure	Polycarbonate
Sensor head / sensor element	Stainless steel 1.4404 / glass
Gauge mounting block	Aluminium anodized or stainless steel 1.4404
Enclosure protection class	IP65

1) Factory setting of the output see manual.
2) The tolerance specifications include the uncertainty of the factory calibration with a coverage factor k=2 (2 x standard deviation). The tolerance was calculated in accordance with EA-4/02 following the GUM (Guide to the Expression of Uncertainty in Measurement).
3) The flow meter is factory adjusted at 7 bar (102 psi) (abs). At operating pressure other than 7 bar (102 psi) (abs), the error can be corrected by entering the actual system pressure via display menu or with EE-PCS configuration software.

Dimensions (mm/inch)

EE741:

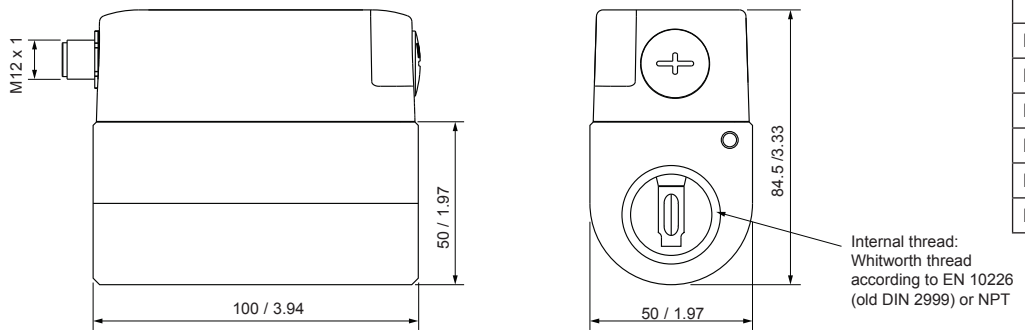

Mounting block	Thread R_p or NPT
DN15	1/2"
DN20	3/4"
DN25	1"
DN32[1)]	1-1/4"
DN40	1-1/2"
DN50	2"

1) only R_p thread

EE741-N50:

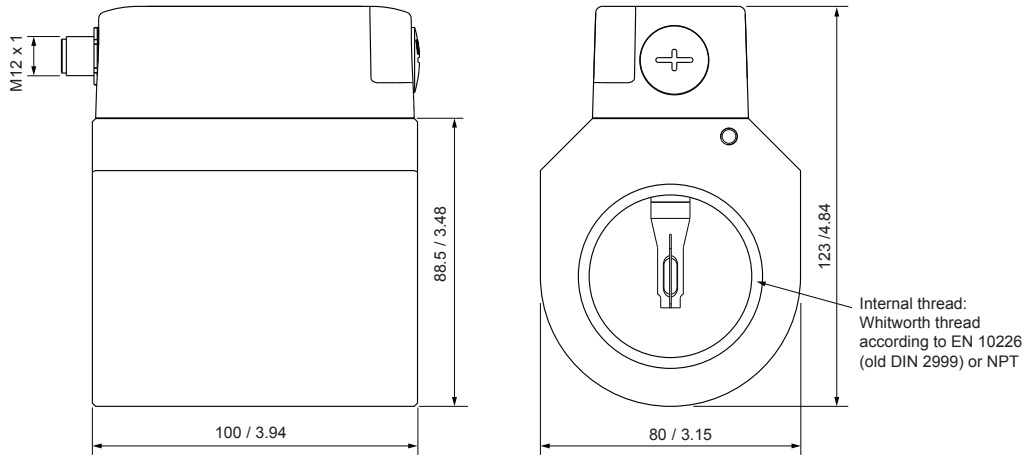

Modbus Map[1)]

The flow meter can be operated in a Modbus RTU network with max. 32 devices. Writing 0 into the corresponding register will reset the MIN/MAX values and the consumption meter.
For Modbus protocol settings see Application Note Modbus AN0103 (www.epluse.com/EE741).

Read Registers (Function Code 0x03 / 0x04)

Register [DEC]	Protocol address [HEX]	Muasured value	Unit	Type
30501	1F4	Temperature	°C	32-bit float
30503	1F6	Temperature	°F	32-bit float
30507	1FA	Standard flow	Nm/s	32-bit float
30509	1FC	Standard flow	SFPM	32-bit float
30511	1FE	Mass flow	kg/h	32-bit float
30513	200	Mass flow	kg/min	32-bit float
30517	204	Standard volume flow	Nm^3/h	32-bit float
30519	206	Standard volume flow	Nm^3/min	32-bit float
30521	208	Standard volume flow	l/min	32-bit float
30523	20A	Standard volume flow	l/s	32-bit float
30525	20C	Standard volume flow	SCFM	32-bit float
30529	210	Consumption meter status	m^3	64-bit-double
30533	214	Consumption meter status	ft^3	64-bit-double

1) Complete Modbus Map see operating instructions.

Data transmission

	Factory setting	Adjustable values
Baud rate	9600	9600, 19200, 38400
Data bits	8	8
Parity	EVEN	None, Odd, Even
Stop bits	1	1 oder 2
Slave addresse	240	1...247

Ordering information

A complete flow meter consists of a transmitter (Item 1) and a gauge mounting block (Item 2).

Item 1 - Transmitter				EE741-
Hardware	Pipe diameter / Type	for DN15, DN20, DN25		no code
		for DN32, DN40, DN50		N50
	Output	Analogue/switch/pulse output		A6
		RS485 Modbus RTU		J3P1
		M-Bus		J5P4
	Display	Without display		no code
		With display		D2
	Cleaning	without		no code
		degreased for oxygen measurement [1]		AF2
Software configuration	Factory setting pipe diameter (selectable)	DN15 (1/2")		DN15
		DN20 (3/4")		DN20
		DN25 (1")		DN25
		DN32 (1-1/4") only for N50		DN32
		DN40 (1-1/2") only for N50		DN40
		DN50 (2") only for N50		DN50
	Output 1[2]	Analogue output	4-20 mA	no code
			0-20 mA	GA5
		Switch output		GA9
	Output 2[2]	Pulse output	(Only with Measurand output 2 = Consumption)	no code
		Switch output		GB9
	Measurand output 1[2]	Standard volume flow	V'n [Nm³/h]	no code
			V'n [Nm³/min]	MA84
			V'n [l/min]	MA85
			V'n [l/s]	MA86
			V'n [SCFM]	MA87
		Mass flow	m' [kg/h]	MA80
			m' [kg/min]	MA81
		Standard flow	vn [Nm/s]	MA22
			vn [SFPM]	MA23
		Temperature	T [°C]	MA1
			T [°F]	MA2
	Measurand output 2[2]	Consumption	Qn [Nm³] (Only for output 2 = Pulse output)	no code
		Standard volume flow	V'n [Nm³/h]	MB83
			V'n [Nm³/min]	MB84
			V'n [l/min]	MB85
			V'n [l/s]	MB86
			V'n [SCFM]	MB87
		Mass flow	m' [kg/h]	MB80
			m' [kg/min]	MB81
		Standard flow	vn [Nm/s]	MB22
			vn [SFPM]	MB23
		Temperature	T [°C]	MB1
			T [°F]	MB2
	Unit for process parameters	SI units [mbar, °C]		no code
		US units [psi, °F]		U2
	Medium[3]	Air		no code
		Nitrogen		FU2
		CO_2		FU3
		Oxygen		FU4
		Argon		FU7

Item 2 - Gauge mounting block		BSP-thread	NPT-thread
Aluminum gauge mounting block	DN15 (1/2")	HA079015	HA179015
	DN20 (3/4")	HA079020	HA179020
	DN25 (1")	HA079025	HA179025
	DN32 (1-1/4")	HA079032	
	DN40 (1-1/2")	HA079040	HA179040
	DN50 (2")	HA079050	HA179050
Stainless steel gauge mounting block	DN15 (1/2")	HA078015	HA178015
	DN20 (3/4")	HA078020	HA178020
	DN25 (1")	HA078025	HA178025
Stainless steel gauge mounting block for oxygen [1]	DN15 (1/2")	HA081015	HA181015
	DN20 (3/4")	HA081020	HA181020
	DN25 (1")	HA081025	HA181025

1) The parts of the transmitter/mounting block in contact with the medium are oil and grease-free. Only for DN15, DN20 and DN25.
2) Only for analogue/switch and pulse output
3) Other gases upon request

Order Example

Item 1 - Transmitter

EE741-A6D2DN15

Pipe diameter/type	for DN15, DN20, DN25
Output:	Analogue/switch/pulse output
Display:	With display
Pipe diameter (selectable):	DN15 (1/2”)
Unit for process parameters:	SI units [mbar, °C]
Medium:	Air

Item 2 - Gauge mounting block

HA079015

Aluminum gauge mounting block	DN15 (1/2“)

Accessories

- Inlet and outlet path BSP thread, stainless steel, for mounting block	DN15 (1/2“)	HA070215
	DN20 (3/4“)	HA070220
	DN25 (1“)	HA070225
	DN32 (1-1/4“)	HA070232
	DN40 (1-1/2“)	HA070240
	DN50 (2“)	HA070250

Scope of supply

Item 1: EE741:

- EE741 according to ordering guide
- 1 x Allen key
- 1 x USB cable
- M12x1 straight socket, can be assembled
- Operating instructions
- Two self-adhesive labels for configuration changes (see user guide at www.epluse.com/relabeling)
- Inspection certificate according to DIN EN10204 - 3.1

Item 2: Gauge mounting block:

- Gauge mounting block incl. sealing plug